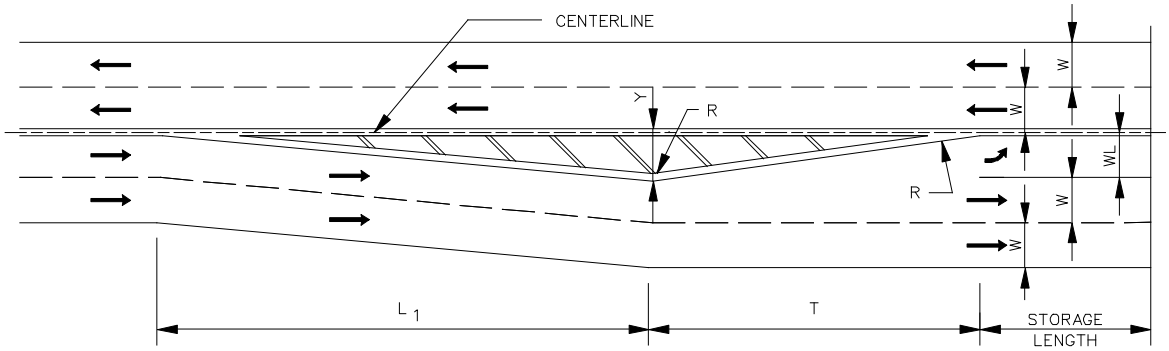

LEGEND

Va = 85 PERCENTILE SPEED, km/h /mph

L = LENGTH OF TAPER, m/FT

R = RADIUS, INSIDE EDGE OF LEFT TURN LANE, m/FT

T = TAPER RETURN LENGTH, m/FT

W = WIDTH OF THROUGH LANE, m/FT

WL = WIDTH OF LEFT TURN LANE, m/FT

Y = OFFSET, FROM CENTER LINE TO EDGE OF LANE, m/FT

DESIGN CRITERIA					
WL	Va	L_1	L_2	T	R
3.0/10	80/50	152/500	76/250	50/163	204/670
3.3/11	80/50	168/550	84/275	52/171	204/670
3.6/12	80/50	183/600	91/300	55/179	204/670
3.0/10	100/60	183/600	91/300	56/183	256/840
3.3/11	100/60	201/660	101/330	59/192	256/840
3.6/12	100/60	220/720	110/360	61/200	256/840

NOTE:
PAVEMENT MARKINGS ARE BY MAINTENANCE DIVISION

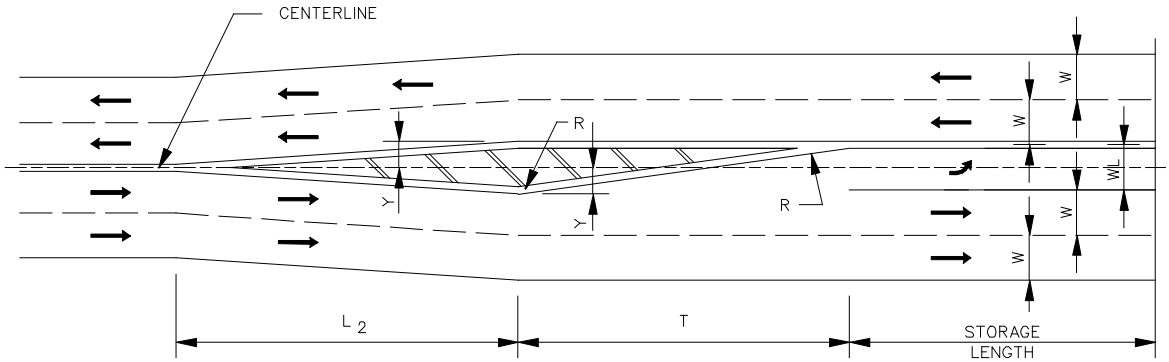

Transition for Left Turn With Flush Medians
80 & 100 km/h Design (50 & 60 mph Design)

Figure 4-05.2 Rev. 6-1-94